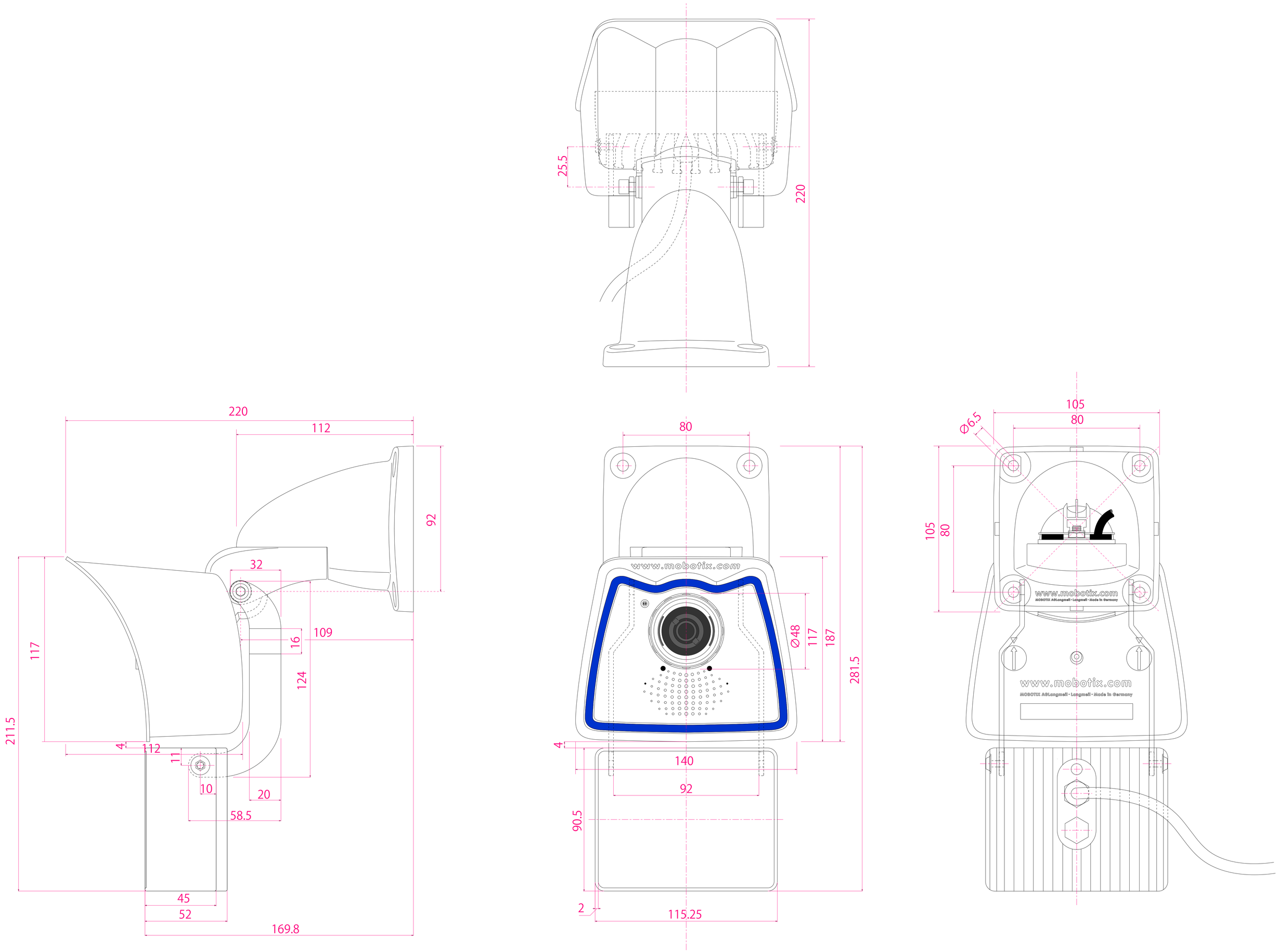

Title	M26 + MxIRLight + Mounting Brackets(Mx-M-IRA-M)	Date	2018.4.9	Scale	1:1

MOBOTIX JAPAN